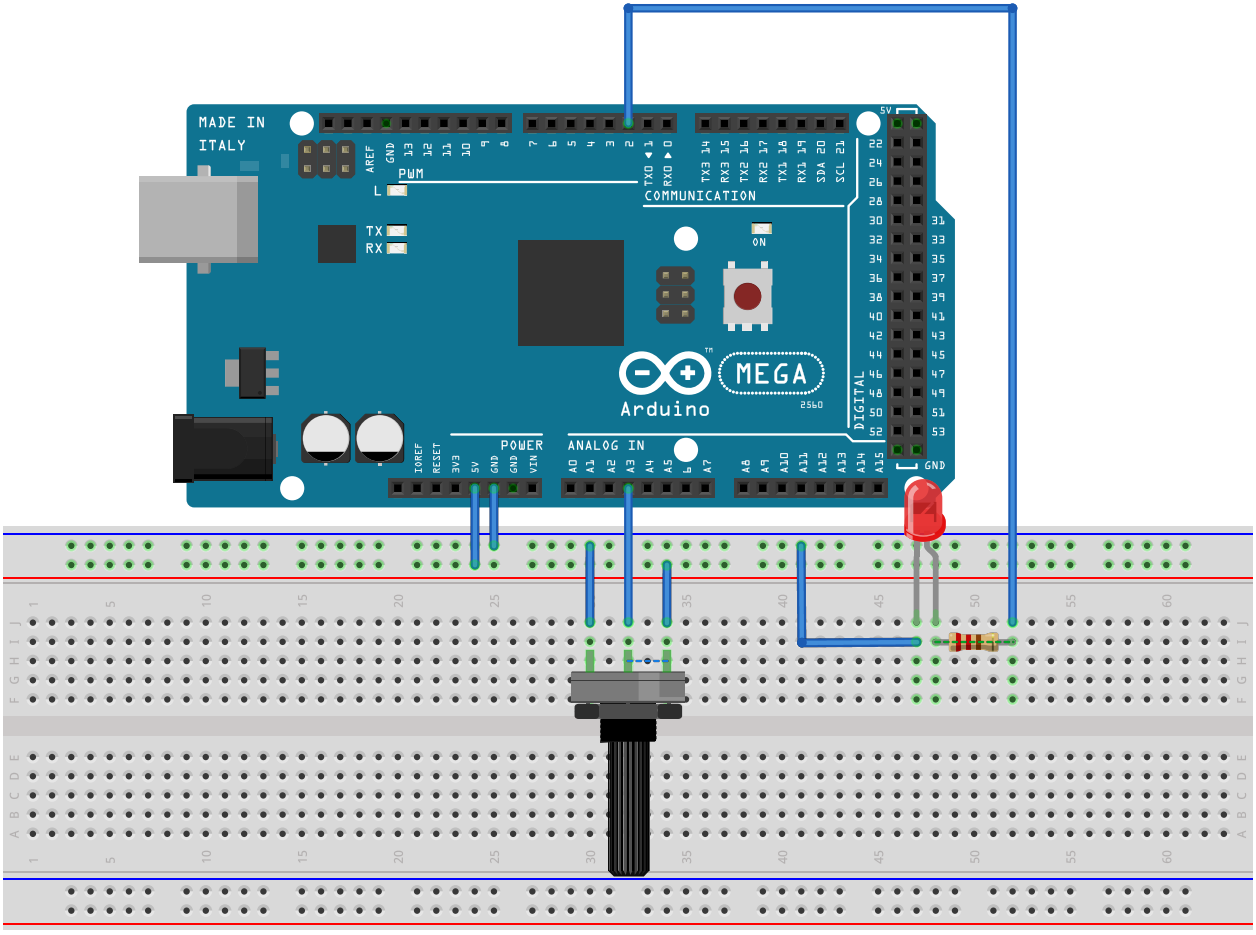
MADE IN
ITALY
PWM
COMMUNICATION
TX
RX
ON
MEGA
Arduino
2560
DIGITAL
POWER
ANALOG IN
GND
fritzing