Thursday, 7th May, 2020.

ADEROJU OLUWAFIKEMI ADEBOSOLA
18/ENG02/102
COMPUTER ENGINEERING
ENG 342 - Advanced Computer Application

A. Benefits of filters in engineering system

A filter is a device or process that removes some unwanted components or features from a signal. Filtering is a class of signal processing, the defining feature of filters being the complete or partial suppression of some aspect of the signal. Most often, this means removing some frequencies or frequency bands. However, filters do not exclusively act in the frequency domain; especially in the field of image processing many other targets for filtering exist. Correlations can be removed for certain frequency components and not for others without having to act in the frequency domain. Filters are widely used in electronics and telecommunication, in radio, television, audio recording, radar, control systems and computer graphics.

B. Designing a Low-Pass Filter with 0.005Ω resistor and 0.01F capacitor

* A 100V Amplitude was selected with a frequency of 1Hz for the sine wave source

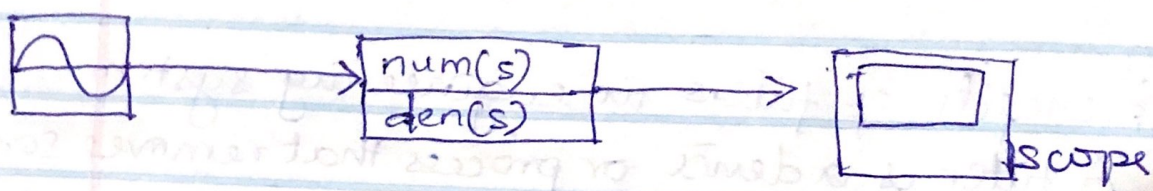

C. Determining the cut-off frequency

The cut-off frequency is calculated by F = 1/2 * (pi * R * C)

when R = 0.005Ω and C = 0.01F

F = 0.5 * pi * 0.005 * 0.01 = 3189.099Hz

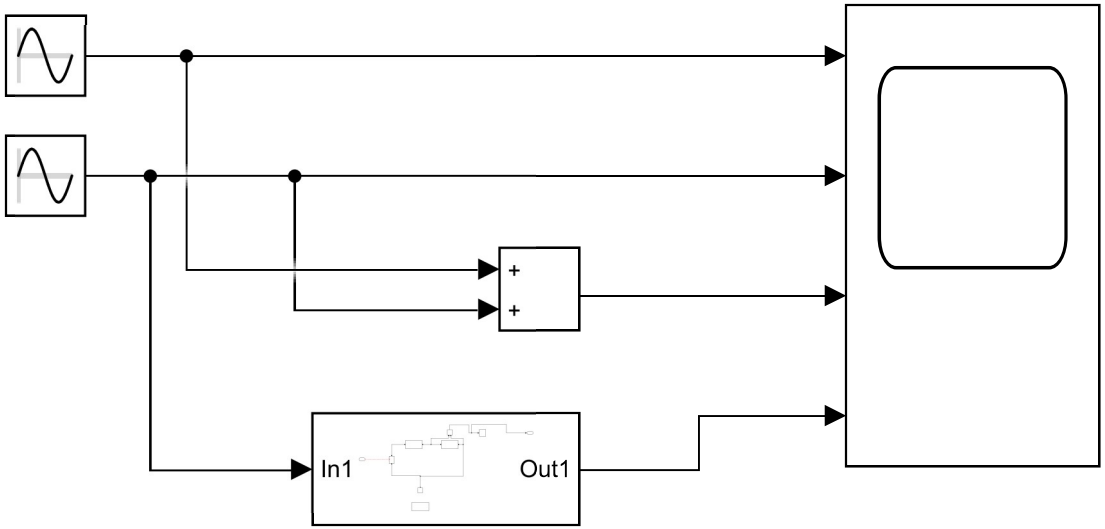
+
+
In1
Out1

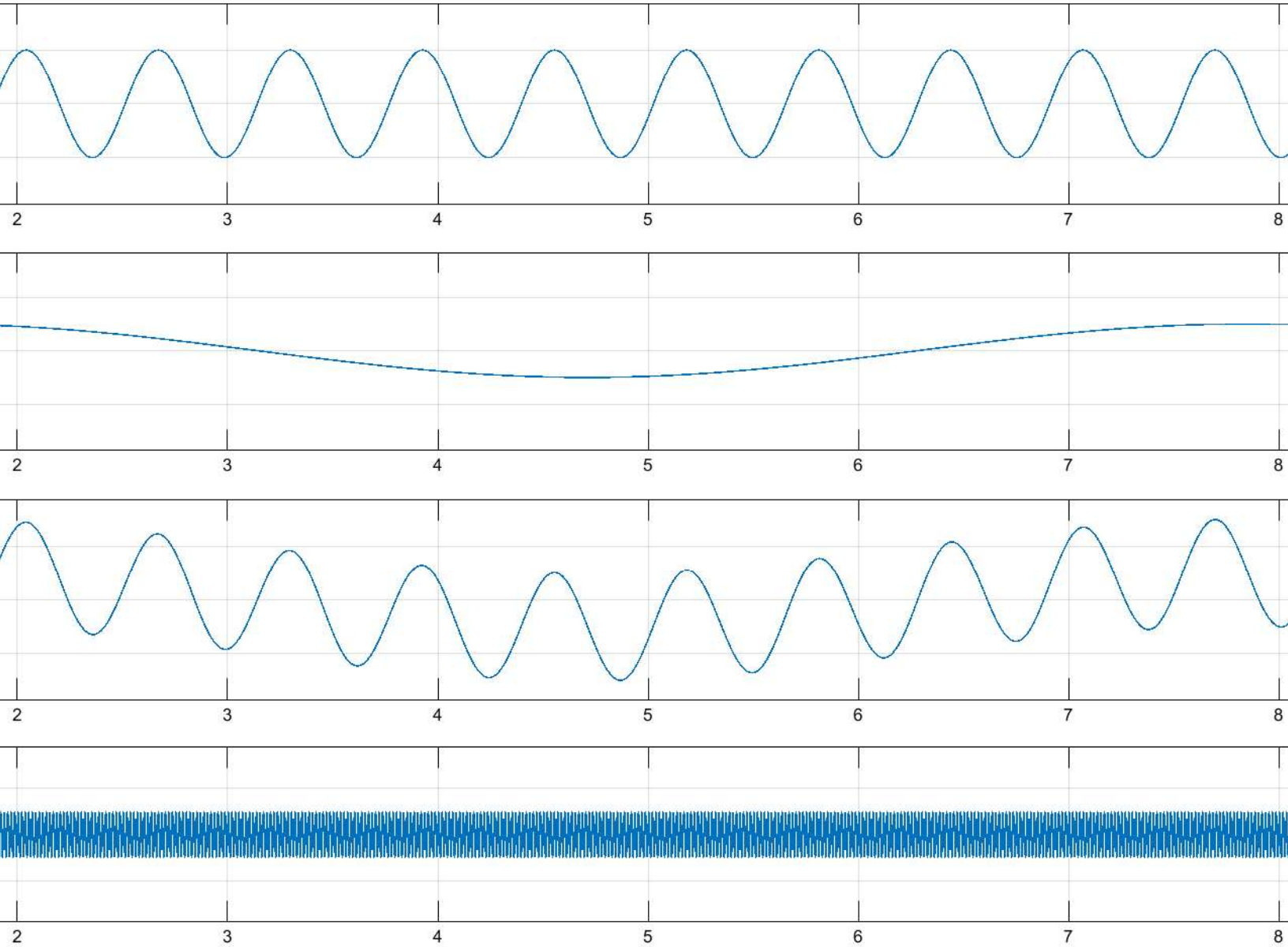
2
3
4
5
6
7
8
2
3
4
5
6
7
8
2
3
4
5
6
7
8
2
3
4
5
6
7
8